GYPSUM ASSOCIATION

Successful Moisture Control Strategies…

...depend on a linked chain of requirements.

Preface

Moisture control is a complex issue. It is dependent on an interlinked chain of requirements: good design strategies, good construction practices, proper job site supervision, and appropriate operation/maintenance of the building. Should any link in that chain be broken, problems can occur. In short, mold is not the only problem associated with excess water in buildings. Building moisture has been linked to potential health problems, including increased risk of respiratory conditions resulting from exposure to mold, microbial agents, dust mites, insects, vermin, and bacteria.

Moisture ingress should be controlled not only to promote the wellbeing of occupants but also the sustainability of a building. Moisture problems in buildings can negatively impact durability, maintenance, aesthetics, and serviceability. The Gypsum Association has developed this guide to provide building industry professionals with a tool that will enable them to recognize potential sources of building problems, to understand the general concepts for control of moisture, and ultimately to prevent the formation of mold on susceptible construction products. This guide does not purport to address all potential sources of water intrusion or to offer all viable solutions. In addition, this guide does not provide mandatory criteria, nor does it serve as a building code. It is the responsibility of the project designer to determine the required performance of the building envelope and to develop the necessary integration details on a project-specific basis.

Design Strategies

Many factors must be considered to ensure proper building performance. First, a designer must determine the use, occupancy, and expected service-life of the building. The use and occupancy of the building, be it commercial, residential, or institutional (e.g. health care services), among others, directly influence the selection and type of system(s) installed. These same factors determine the interior loads and overall performance of the structure.

When considering building envelope performance, there are generally four primary moisture transport mechanisms that must be addressed. These include: liquid flow, capillary suction, air movement, and vapor diffusion. Each of these mechanisms can contribute to moisture migration into and through the building envelope. Regardless of whether moisture is in the form of liquid or gas, three things are required to move water through a building assembly: a moisture source, a path, and a driving force. Intrusion of moisture in all forms should be prevented to avoid damage to building products and improper performance. Examples of damage include staining and discoloration of the interior finishes and the infestation of dust mites, decay fungi, insects, and mold. While the connection between mold and health issues may remain under debate, the formation of mold and decay fungi is understood to be linked to the presence of moisture. Therefore, good design strategies must address these concerns. The formation of mold and decay fungi is addressed in greater detail in the Interior Finishes and Operating Conditions section.

Moisture that moves through building assemblies in the form of water vapor is commonly addressed using air and vapor control systems. Air and vapor control may be achieved using single or separate systems. Air control requires structural continuity and the capacity to withstand wind loads. Vapor control can be accomplished using a variety of materials. Those materials are typically located within an exterior wall assembly, and their position within the wall assembly is determined by the exterior climate and indoor environmental conditions. Materials with lower vapor permeability reduce moisture flow resulting from diffusion. However, while a material with a lower vapor permeance can retard the wetting of a building assembly, it can also impede drying.

In addition to moisture transport mechanisms, the thermal performance of a building can also contribute to moisture problems. The four methods by which heat transfer occurs are: conduction, convection, radiation, and heat transfer due to a change of state. Conductive heat flow through a material or combination of materials can lead to summer or winter condensation at the building interior or exterior under certain conditions.

Prior to determining the materials and components to be used to construct a building, it is necessary to select the type of barrier system that will be used. There are three general system types available for protecting structures from liquid water intrusion: mass wall, exposed barrier systems, and concealed barrier systems.

Mass Wall

In mass or storage wall systems, water intrusion is prevented by the mass of the material and its ability to store water. Examples of this type of system include stone, multi-wythe masonry, and adobe.

Exposed Barrier

In exposed barrier or face-sealed systems, weather protection is provided by the exterior face of the cladding. Water is precluded from entering through the exterior cladding itself; therefore, building codes historically have not required Water-Resistive Barrier (WRB) membranes or cavities behind them to protect the interior framing and finishes. Examples of face-sealed wall systems include pre-cast concrete panels, metal panels, and many stone veneers. The same concept applies to waterproofing and roofing applications where single-ply membranes are commonly used to prevent water intrusion.

Concealed Barrier or Drainage Wall

Concealed barrier or drainage wall systems do not prevent water from entering through their face materials. These systems incorporate WRB membranes or water-repellant sheathing installed behind the surface materials to prevent moisture intrusion. With most cladding types, the concealed barrier system may be designed so that the cladding is applied in direct contact with the membrane, or the system may be configured to include a cavity space that separates the cladding from the concealed barrier, thereby creating a capillary break. Claddings commonly requiring a concealed barrier are brick, masonry, lap sidings, and stucco. As with the exposed barrier systems, concealed barriers are also suitable for both roofing and waterproofing applications. In traditional shingle roof applications, the shingles act to shed bulk water from the surface, and secondary membranes installed below the shingles collect and drain away incidental moisture.

One form of drainage wall incorporates multiple methods of rain water control - the Pressure-Equalized Rainscreen (PER). A PER design employs strategies to anticipate all of the forces that drive rain through a cladding: air pressure difference, gravity, surface tension, capillary action, and rain drop momentum. The intent is to "vent" the backside of the exterior cladding to the outdoor environment, thereby reducing the air pressure differential to minimal levels. One of the keys to this approach is an effective air barrier inboard of the cladding so that water that does penetrate the rain screen is not transported into the interior by air flow.

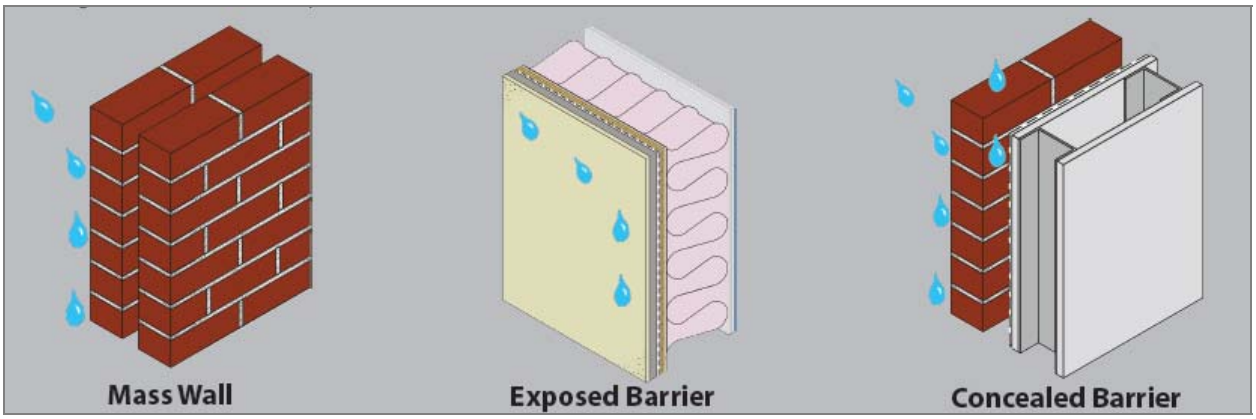

Several parameters can influence the selection of cladding and components, including, but not limited to, the desired level of performance of the structure, the local climate, and the requirements of the applicable building code. Building code authorities and construction industry professionals have historically recognized both exposed and concealed barrier systems as viable design options, and both system types remain popular today. However, it is important on any

project for the designer to verify local code requirements for each jurisdiction and building type. Current industry trends place great importance on energy and environmental efficiency, as well as functionality, economic performance, and occupant satisfaction. Therefore, items such as sustainability and LEED certification are also becoming influential and must be considered in design of buildings.

Once the design strategy has been developed, the designer must describe the strategy's elements in construction documents. Clear and concise construction documents containing specifications and drawings are essential to the successful execution of any construction project.

Architects use specifications to define the level of quality for the materials selected and describe the methods used to assemble the building systems. However, the selection of materials and methods for each project is not based solely on an architect's preferences but must also meet the building owner's use requirements and cost constraints. Designers must resist the temptation to reuse specifications from other projects, which may include unrelated provisions and omit relevant information.

Project specifications typically fall into one of four categories: proprietary, reference, performance, or prescriptive. Proprietary specifications are the most restrictive in that they require specific products and manufacturers. Reference specifications use references to industry standards in order to define product requirements. Their use can eliminate the need for lengthy descriptions by referencing published material and testing standards. Performance requirements can be used by an architect to specify an end result, leaving material choices up to the contractor. For example, general performance specifications may require a building envelope to be water or air tight, but the methods by which the end result is accomplished are left to the contractor. Performance specifications must therefore clearly delineate the desired end result to ensure that the owner receives the level of quality expected. Prescriptive specifications provide written descriptions of each material to be used.

Drawings and specifications are intended to complement one another, rather than having one take precedence over the other. Architectural drawings must depict the appropriate level of detail for the overall project. They must also show the quantity and locations of materials used. In addition to providing the proper technical data through individual drawings and details, the entire drawing set must be coordinated to convey the entire scope of the project, which may include the integration of multiple disciplines.

Additional information regarding specification development and Master Guide specifications can be obtained through the Construction Specification Institute.

Construction & Practice

Proper building performance is the result of good design and construction practices that include the careful preparation of contracts and drawings and the careful assembling of building systems. Many professionals reference the requirements set forth in the building codes as guidelines for good construction practice; however, the building code serves to regulate building construction and to establish minimum requirements necessary for promoting public health, safety, and welfare. Therefore, it is the role of the designer and project team to evaluate code provisions and determine whether they alone meet the desired performance level for the project. It is important for designers to recognize that code compliance does not imply enhanced building performance.

There are many players and participants in the construction process, including developers, builders, contractors, public agencies and regulatory bodies, manufacturers, lenders and owners. Therefore, a consensus regarding roles and responsibilities must be reached and understood by all parties. Several professional organizations publish standard construction contracts for varying project approaches that carefully define the roles of the designer, builder, and owner. These documents can be custom tailored to a specific project approach and scope.

Traditionally, the designers or architects have many responsibilities from project inception through the completion of construction. As owners' representatives, architects and designers often provide the link between the owner and contractor by monitoring the work during progress and providing assistance with post-construction services. Architects and designers may also evaluate materials and components for compliance with project intent, manufacturers' requirements, and regulatory bodies.

The general contractor is responsible for sequencing the trades and specialty contractors, coordinating with suppliers for delivery of materials and components, as well as the actual construction. It is important to understand the responsibilities and services provided by the general contractor versus responsibilities and services provided by specialty contractors. Suppliers provide building materials and components and/or the equipment needed for fabrication or installation. While suppliers are not typically directly involved in the construction or design of a project, they can be consulted on installation procedures and project-specific details. Materials can be selected for cost, energy efficiency, or ease of installation. Designers and general contractors must consider the compatibility or adjacent or surrounding materials, as well as sequencing and integration.

Moisture problems can be the result of improper design, component assembly, or material selection. Bulk water intrusion through the building envelope is the most common source of problems and damage that may lead to the formation of decay fungi and mold. Regardless of the building materials and configuration involved, water intrusion through exterior walls follows two basic paths: passage through materials or passage through the interfaces between adjacent materials or systems. While individual components must perform as intended, each component must also be properly integrated with the surrounding materials in order to perform acceptably. Components and areas worthy of special attention during all stages of a project to ensure proper building performance are: foundations, roofs, exterior walls, windows, doors, flashing, and interior finishes, each of which is addressed below.

Foundations

Fundamentals

The foundation walls of a building provide structural support and serve as a barrier between the interior space and the earthen elements. Water removal and control is an important consideration in maintaining the integrity and performance of the structure. For portions of the foundation wall below grade, proper drainage materials should be incorporated to reduce the pressure exerted by the water on the wall. Good design should also ensure that the foundation wall extends adequately above grade to provide the proper clearance and protection against water intrusion. Any building materials that are sensitive to moisture must also be kept above grade and away from landscaping to comply with codes and good construction practice. Moisture problems in basement and crawlspaces from liquid water and water vapor transmission can lead to deterioration of framing materials, insulation, gypsum wallboard, and interior finishes.

Application / Design

One design strategy for preventing moisture problems around building foundations is to control surface water. This includes proper site drainage by providing positive slope away from the building itself and proper drainage of roof runoff. To minimize the potential for moisture problems, collecting roof water runoff and directing it into catch basins, or discharging it as far from the foundation as practical, reduces the amount of moisture to which the foundation is exposed. This requires proper design and installation of gutters, drains, scuppers, and downspouts.

Common foundation waterproofing materials include: fluid-applied materials, sheet-membrane systems, and sodium bentonite applications. It is important to recognize the difference between “damp proofing” and “waterproofing.” Many products used on foundations provide some water resistance but are not impermeable to water. Therefore, the designer must properly assess the site conditions and determine what level of water-penetration resistance is warranted for each project. In addition to the waterproofing materials, other important components of the foundation system include protection board, insulation materials, waterstops, and drainage pipes. These additional components help protect the waterproofing layer, reduce hydrostatic pressure, and provide a means of drainage.

Residential foundations are often coated with damp proofing products which perform acceptably in many cases. However, these products have limitations, including an inability to resist hydrostatic pressure and thin film thicknesses that make them susceptible to failure if movement or cracking of the substrate occurs. Therefore, the designer should assess the site conditions to determine if greater water resistance is required.

Waterproofing products in many cases are completely impermeable to water. Liquid or sheet products are applied directly to the foundation, and as long as they are installed properly, will prevent moisture intrusion even under many extreme conditions. Bentonite products are different from the liquid and sheet applied goods, and can be used in addition to those products, or as a sole waterproofing product. Bentonite is a clay material that expands when exposed to water and when properly installed can also create a barrier to water infiltration and can even be used to seal cracks in concrete foundations.

Basements and crawlspaces are not the only types of foundations susceptible to moisture problems. Concrete slabs-on-grade can also permit moisture intrusion that leads to indoor moisture problems and material degradation. Although hydrostatic pressure from the water table is not normally a problem with slab-on-grade construction, the presence of water vapor or even liquid water due to capillary action is a potential concern. Another source of moisture associated with cast-in-place concrete is the initial water mixed with the cement and admixtures to make up the concrete. Although some of the water is chemically bound in the concrete, a significant amount evaporates out during curing.

Moisture emitted from concrete during curing, or from sub-surface water vapor diffusion through the slab, can lead to the degradation of materials in contact with the concrete, including the delamination of coatings and flooring failures. Moreover, excessive moisture content in a building interior can lead to condensation and interior moisture problems that manifest in other areas or components of the building. Consequently, it is necessary to ensure that adequate curing of green concrete has occurred before the building is enclosed and before applying any coating or flooring material.

The designer must carefully consider the building requirements of each project; however, the use of a vapor barrier under concrete slab-on-grade, with the use of a capillary break, can help reduce moisture migration through the slab and associated material problems. The designer can also require that quality assurance methods are employed to verify that the moisture transmission (due to either evaporation of built-in water or diffusion from sub-slab moisture) is low enough to allow the final floor covering material. This is especially crucial when using adhered flooring materials with low vapor permeance, which can be more prone to moisture problems.

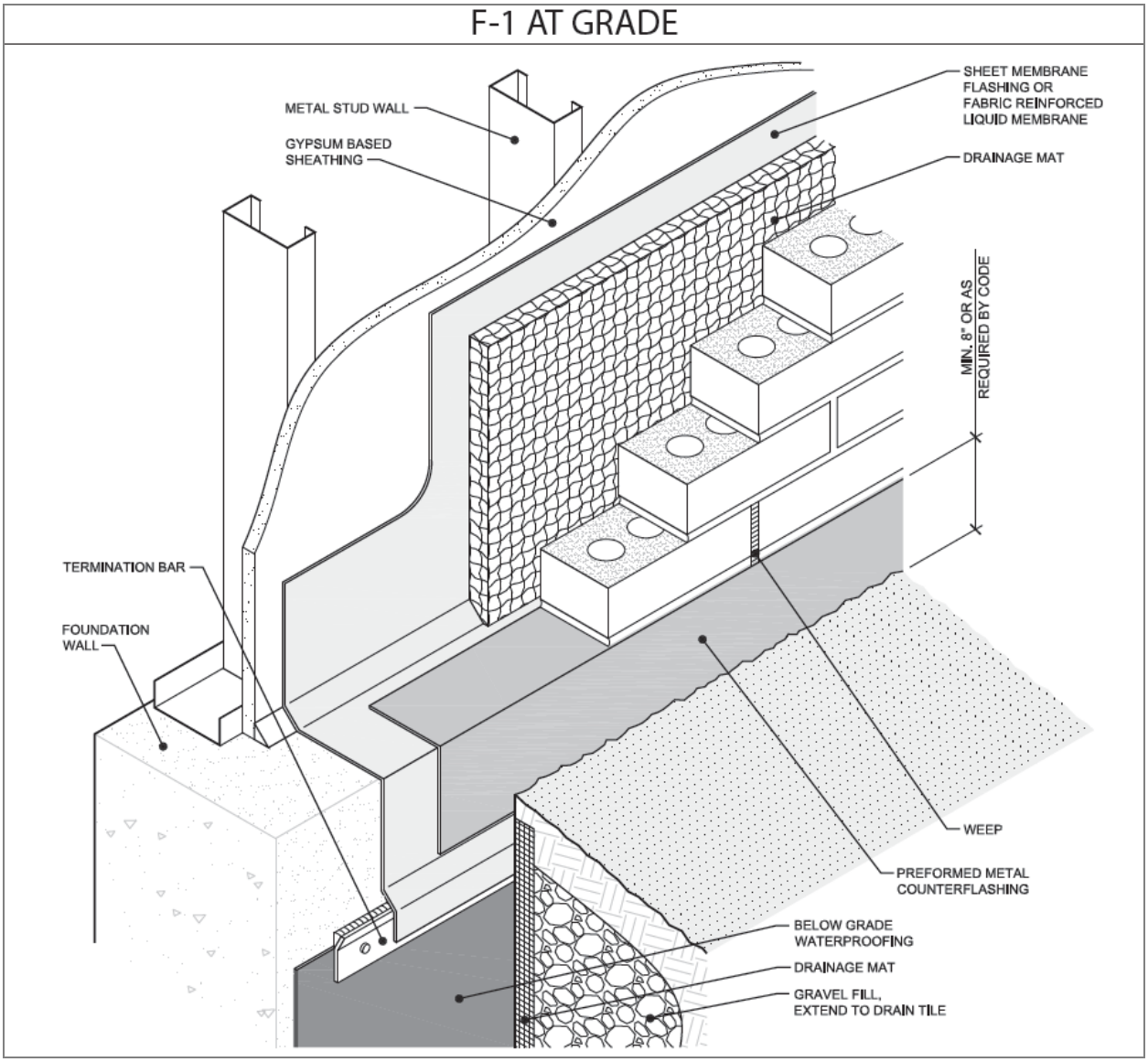

Recommendations

In some cases, it may be beneficial to integrate the above grade weather barrier with below grade waterproofing systems. Such an approach can provide good performance for air and water resistance by providing a continuous barrier over the intersection of the walls and foundation. However, many weather-resistive barriers and waterproofing products are sensitive to ultra-violet light. Furthermore, if exposed at the base of wall they are susceptible to damage or abuse. To protect these materials it is appropriate to provide a protective cover at the transition. Depending on the design requirements, installation of exterior foundation insulation, drainage mat, and appropriate backfill materials should be used.

Additional information and guide details related to foundations for various climates can be found in the Building America Best Practices Series.

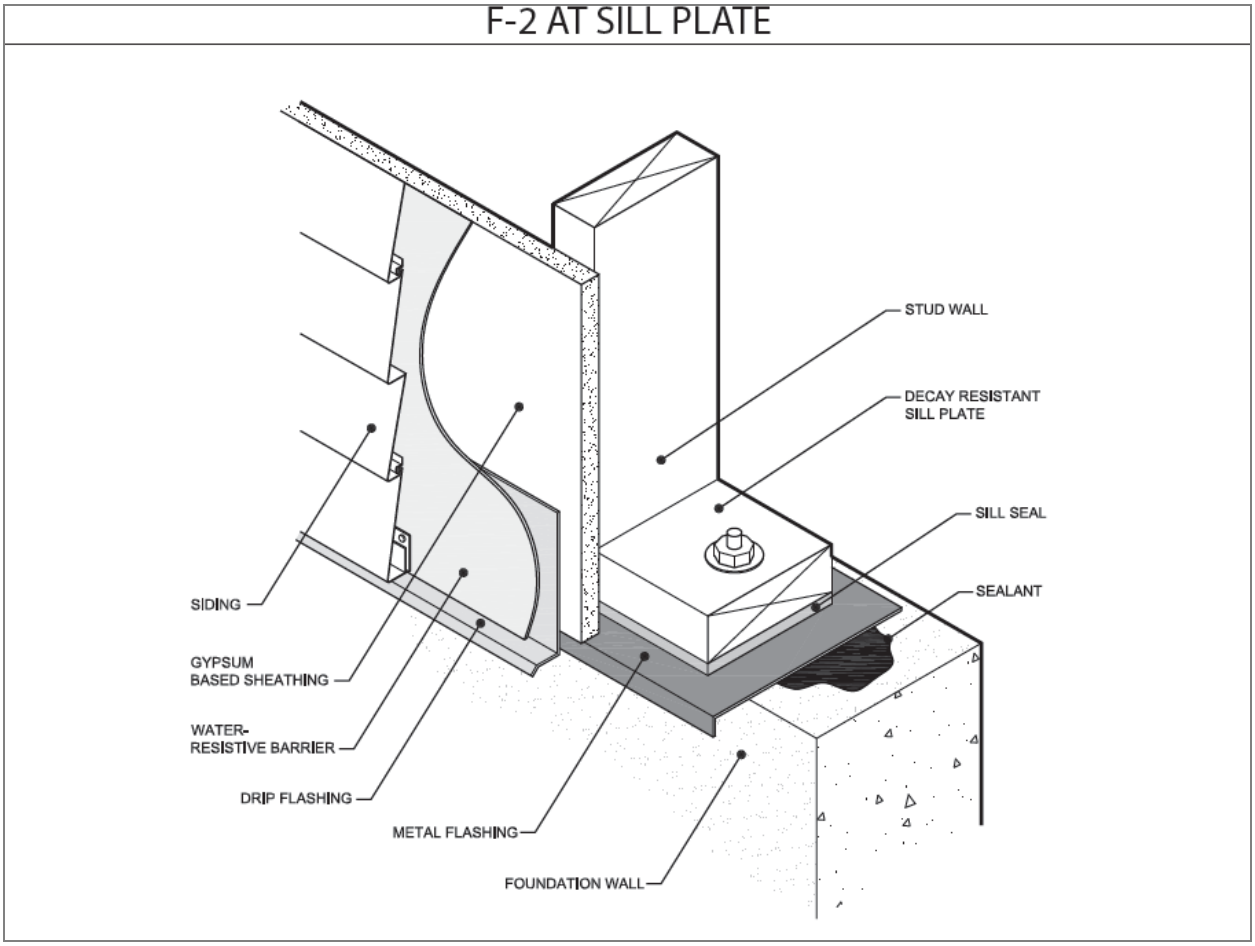

Recommendations

Detailing at the base of walls is important to control not only air and water infiltration, but also to prevent unwanted entry of pests, including termites and other potentially damaging insects. Without proper detailing and construction, it is common to have base of wall conditions that result in exposed sheathing and framing. Although in many cases this does not result in moisture problems, if the site grading is not sloped away from the building or if there is wetting due to splashing rainwater, repeated moisture exposure can lead to material degradation. In addition to providing adequate clearance between the top of the foundation and grade, installation of flashing and air seals help protect the building materials and occupied spaces from moisture and pests. Configuration at the base of wall depends on a variety of factors including the cladding type, and the relationship of the sill plate to the exterior of the foundation. If the sill plate is recessed from the outside face of the foundation, the sheathing and framing stop at the top of the foundation, and the cladding material may extend down over the foundation to help protect the concealed building materials. In cases where the sheathing sits outboard of the foundation, there is a greater chance for exposure unless properly protected. The detail depicted illustrates the use of metal flashing to not only manage moisture that penetrates through the cladding, but how metal flashing below the sill plate could be used to protect the sheathing from exposure to moisture and act as a termite shield.

Additional information and guide details related to foundations for various climates can be found in the Building America Best Practices Series.

Walls

Fundamentals

Over time, building construction technologies have evolved and progressed, resulting in new exterior wall materials and systems. These industry changes have also created increased demands on designers and builders to develop and implement means to ensure successful building performance, particularly in terms of durability and the prevention of biological growth.

Exterior walls perform many functions beyond providing the thermal and moisture protection of the occupants. Walls also serve to isolate the occupants from noise and to provide varying levels of fire resistance. Gypsum products and assemblies provide good performance for many of these functions, whether installed on the interior or exterior of the building envelope.

Specific elements that are common to opaque exterior walls include the following: cladding material, air cavity or drainage plane, water-resistive barrier, air barrier, insulation, and structural members. Selection of the elements and their integration is up to the discretion of the designer based on the building’s function, owner requirements, and desired aesthetics. The inclusion and configuration of each can greatly impact the performance of the wall system.

Liquid Water

The control of liquid water through exterior walls can be handled in a variety of ways and is impacted by many design decisions. Regardless of whether the designer chooses to employ a concealed or exposed barrier, the material serving as the water barrier must be continuous and properly integrated with other building components, including flashing and fenestration. The weather barrier itself may be the cladding, such as pre-cast concrete or metals panels, or a separate material installed behind the cladding.

Secondary barriers are often sheet or liquid-applied membranes. Each material has specific material properties and in some cases may serve another function, such as an air or vapor barrier. It is important for a designer to understand the performance implications of a material's properties and select materials based on project-specific requirements. In addition, a designer must check governing code requirements to verify the need or suitability of a secondary water-resistive barrier.

Installation or utilization of a cavity or drainage plane can alter the performance characteristics of an assembly. By providing a separation between the cladding and the secondary barrier, a capillary break is created that serves to impede moisture migration to the interior. In addition, the cavity space can be designed to reduce air pressure differentials across the cladding which can otherwise contribute to liquid water leakage to the interior.

Water Vapor

Water vapor migration through building envelopes occurs by both air flow and vapor diffusion. Although both transport mechanisms have the potential to contribute to building problems, air flow has the ability to move significantly more moisture than vapor diffusion; however, both moisture transport mechanisms should be considered during design.

Condensation is often said to occur in building envelopes when air reaches materials with temperatures that are below the dew point. However, in reality, the moisture content of porous materials is constantly changing as it seeks equilibrium with the surrounding environment. Therefore, the presence of moisture-laden air in contact with porous materials with temperatures below the dew point is more likely to result in absorption and an increase in moisture content, not liquid condensation. Furthermore, depending on the permeability of surface coatings, material deterioration or formation of biological growth can occur even in the absence of condensation in the form of liquid water.

Control of water vapor diffusion has traditionally been performed by installing a vapor retarder (1 perm or less) on the warm side of the insulation. Current standards have been updated to address the applicability of vapor retarders of varying permeabilities for different climates and types of construction. Consequently, vapor retarders of 1 perm or less may not be warranted for all buildings. Many codes now accept hygrothermal analysis as a way to validate design variations other than the traditional requirement of 1 perm vapor retarder. Using more vapor permeable (above 1 perm) materials can help promote the drying of a wall or roof assembly. It is important for a designer to study the design for the specific project as a predictor of performance. Computer-based hygrothermal analysis tools are commercially available to designers. Also, building envelope consultants can provide assistance to designers for such purposes. ASHRAE Standard 160 Design Criteria for Moisture Control in Buildings provides guidelines for use in such simulations.

Air flow control in buildings is important not only for preventing moisture problems, but also for reducing energy consumption. Additionally, unwanted air infiltration can contribute to air quality issues due to the infusion of outdoor pollutants. In order for air flow to occur, there must be a path for air movement and differential pressures between the spaces. Air pressure differentials may occur due to wind pressure, stack effect, or pressures induced by the HVAC systems.

Air barriers can be installed at a variety of locations within the building envelope. Because many of these materials are vapor permeable, their placement is not dependent upon the location of the building insulation and concerns for condensation. However, many sheet and liquid applied weather-resistive barrier products currently available are marketed to perform multiple functions, and they can control liquid water and / or vapor flow. Also, insulation board products can provide vapor and air control in addition to thermal insulation if properly detailed. Not all materials are appropriate air barriers, so it is important for the designer to understand the material properties and the installation detailing needed if the product is to perform the intended function(s).

Regardless of the product used, continuity of the air barrier is critical, and therefore requires air tight integration with other wall components. In a typical building, a wide variety of system terminations and penetrations will be present in the building envelope. Also, air barriers must be able to withstand the wind loads imposed on the structure. The wind load affects not only the selection of the air barrier material itself, but the attachment and method of integration with other building envelope components. Due to the complexity of buildings, the drawings and specifications must identify the locations and design intent of such transitions in order to achieve the required continuity. The specifications are also important for defining any quality assurance testing.

W-1 CAVITY SEAL

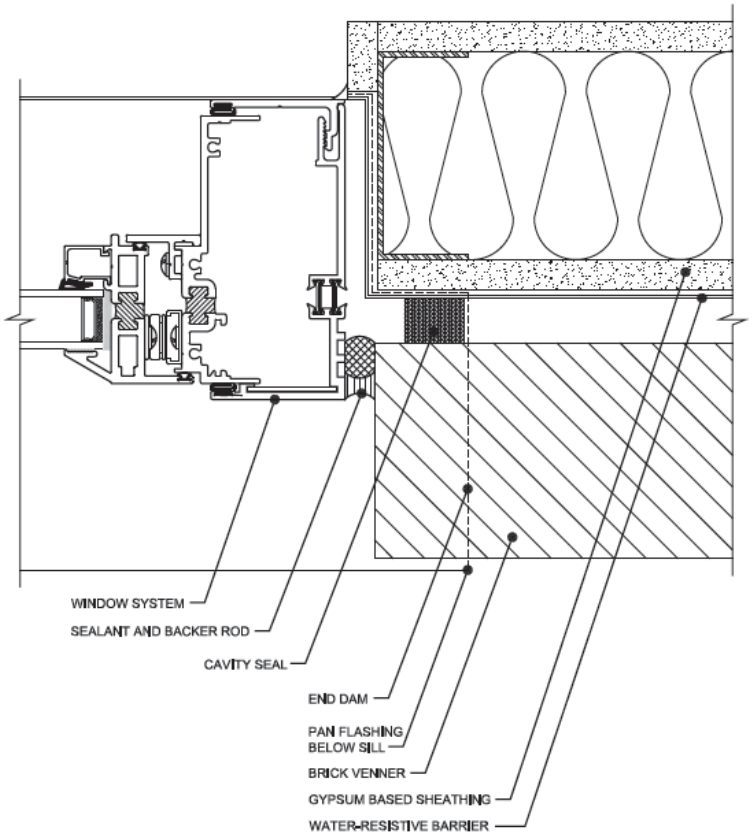

Recommendations

Masonry veneer consists of an exterior wythe of masonry as the cladding. An air space/drainage cavity is employed behind the masonry veneer to allow water that penetrates the masonry to flow down to the base of the wall and directed to the exterior. Typically, the air space temperatures at the masonry veneer more closely resemble temperatures at the exterior rather than interior. For example, in northern climates where winter months are cool, the air space behind the masonry veneer can be filled with cold air. If this air contacts the interior portion of window frames or interior finishes that are directly exposed to the warmed, interior air, condensation can result. Therefore, cavity seals are typically recommended at windows, doors, and other openings to prevent the passage of cold, cavity air to the frames of fenestration products. Additional information and guide details specifically related to masonry wall can be obtained from The Brick Industry Association.

General information and detailing can also be found in The Whole Building Design Guide published by the National Institute of Building Sciences or from the Air Barrier Association of America (ABAA).

Roof Systems

Fundamentals

The roofing system is a vital part of the exterior weatherproofing envelope and is comprised of a multitude of materials and components. It is critical to the overall performance of the entire building envelope as it is responsible for collecting and moving bulk water away from walls and foundations. Water management may include large overhangs that help shelter the exterior walls, or it may simply collect and drain the precipitation away from the building.

Pitched roof applications, common in residential structures, rely on the force of gravity and surface friction to direct the flow of water downward and away from the building. Common shingle applications are not waterproof, but, when installed over a structure with the proper slope, shed enough water to prevent leakage to the interior. In low-slope roof systems, the roof materials are installed in a continuous manner from impermeable materials. However, it is even more critical that these systems be installed properly to prevent moisture intrusion. Low-slope is identified as any system with a slope of less than or equal to 3:12. Similar to walls systems, it is crucial that terminations and penetration of roof systems be properly designed and installed to provide proper performance.

Application/Design

The configuration of the roof and walls often impacts the material selection for not only the roofing materials but the associated flashing and materials used at transitions and terminations of the building envelope. Flashing at the intersections and terminations of the roof system are the most susceptible to moisture intrusion. Common locations of roof flashings are at valleys, chimneys, roof penetrations, eaves, roof perimeters, ridges and at roof-to-wall intersections. This section provides information and guide details addressing good construction practices in common roof applications.

The termination of the roof at the building perimeter is a critical detail regardless of roof type or material. In projects where the building perimeter is designed with a parapet wall or knee wall, the roof system terminates in a nearly horizontal condition. Commonly, this type of configuration is terminated with exposed metal or with concealed flashing installed beneath a decorative coping, such as natural or cast stone. Both conditions require proper integration with roofing materials and continuity of the flashing material. When possible, extending the roof membrane or a self-adhering membrane over the top of the wall under a coping provides a secondary line of protection. When using exposed metal coping, it is important to ensure that the laps and seams in the metal are installed in accordance with industry standards and good construction practice. Concealed flashing also requires continuous installation and can be more complicated due to the attachment of the coping material, which often involves dowels or fasteners installed through the flashing.

Roof surfaces terminated without walls at eave or rake locations are susceptible to moisture intrusion. Eave locations present additional complexities as they often include gutters. Proper flashing installation and integration with water runoff collection systems are key. Additionally, eave locations can be subject to ice damming and related moisture intrusion in cold climates if self-adhering membranes are not installed and integrated with other flashing components.

Roof valleys collect water runoff from adjacent roof surfaces and carry it to the bottom edge where it is collected or discharged. On large roofs, this can result in a substantial volume of water moving up the opposite slope of the valley at significant velocity. Therefore, it is important for valley detailing to be wide enough to handle the rain load in this area. It is common to use a self-adhering membrane below the surface and use metal flashing or the roof material as the exposed material. It is also important to avoid “dead valleys,” which do not have direct drainage of water and can contribute to moisture intrusion.

Chimneys and other projections above the roof levels can impede the downward flow of water runoff, which may result in severe wetting of the obstruction. Therefore, it is important to properly flash the projection so that the flashing extends well above the roof surface and to include a cricket (ridge to divert water) to prevent a “dead valley” and to direct water around the projection.

Roof ridges are often capped with the roofing material used on the rest of the roof. In the case of a non-vented ridge, an application of self-adhering membrane underneath the roofing material can aid in providing a continuously sealed weather barrier. However, the ridge is often used for continuous roof venting. In this case, it is important to include adequate coverage and to install the vents in accordance with the manufacturer’s written instruction to get proper performance. Without balanced venting between the ridge and eaves, and without proper detailing, water leakage can occur.

Roof-to-wall intersections are some of the most critical intersections in the building envelope - and often the most problematic - because this intersection typically involves both wall and roof materials and therefore two trades. If installation of each of the two systems is not properly coordinated, water intrusion can result. Many of the available flashing materials, sealants, mastics, and other products also have compatibility issues that need to be considered during the design stage. Understanding the material compatibility between through-wall flashing materials and roofing materials is important, as is properly staging their delivery and installation, so that each system consists of materials compatible with other systems and is installed correctly and in the proper sequence.

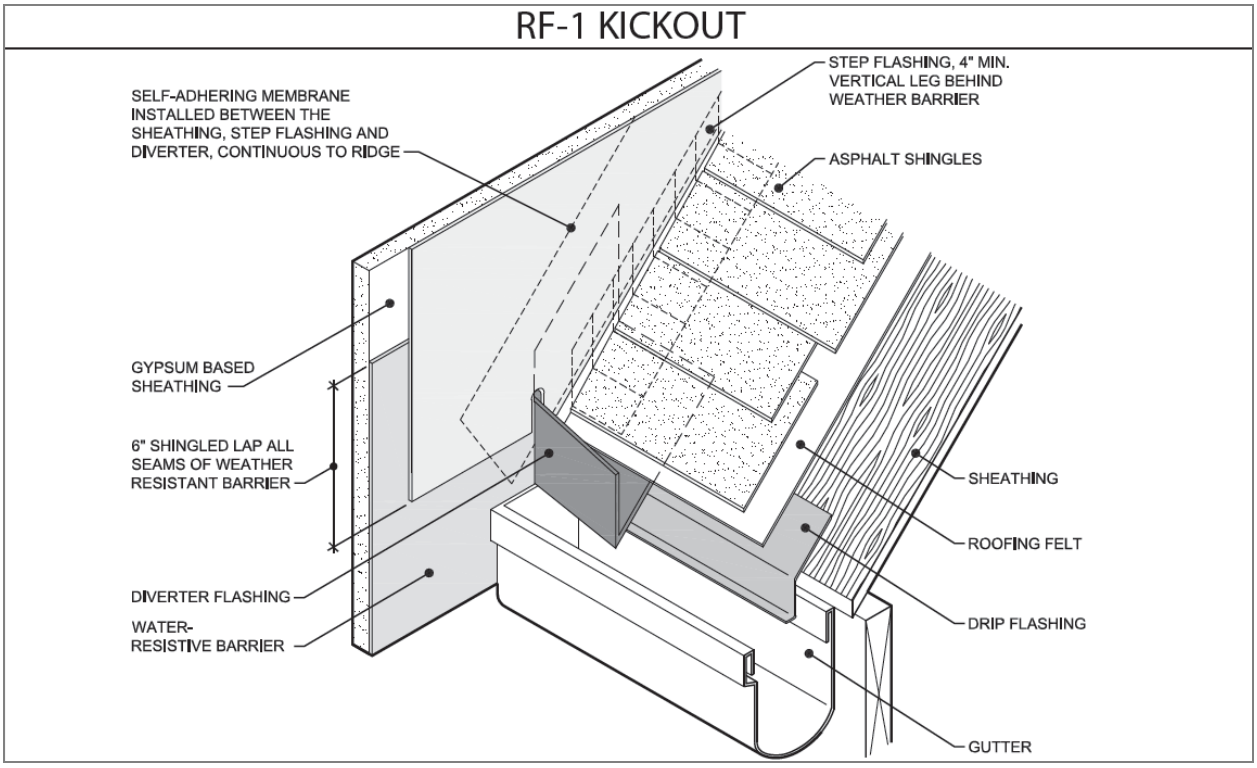

Recommendations

The roof rake condition at roof-to-wall intersections can be subject to large quantities of rain water runoff depending on the size and configuration of the roof. As with other integration details, the termination of the roof rake needs to be properly detailed to prevent moisture problems in the building envelope. Proper configuration and shingling of the roofing and wall components, including the step flashing, roof underlayment, weather-resistive barrier, and diverter flashing are necessary to preclude water intrusion.

A roof rake diverter as shown in the detail is an appropriate flashing components for many cladding and roof types. It is important for the diverter to be fabricated in such a manner to be watertight. Numerous preformed flashing products are available to builders, eliminating the need for field fabrication. Typical installation steps might include the following:

1. Self-adhering membrane can be installed on the wall at the roof rake termination before the roof flashing components or weather-resistive barrier.

2. Install the roof rake diverter flashing at the bottom of the roof rake. The flashing should be water tight and extend a minimum of 4 inches vertically up the wall.

3. Install the new step flashing in a shingle fashion to ensure proper overlap of all pieces to prevent water intrusion. Verify the step flashing is integrated with the diverter flashing to direct water away from the wall.

4. Install new weather-resistive barrier over the wall sheathing ensuring the WRB is lapped over the new flashing to direct water out from behind the cladding and onto the roof.

5. Install the cladding material, maintaining clearance between the siding and the roof shingles.

RF-2 PARAPET WALL

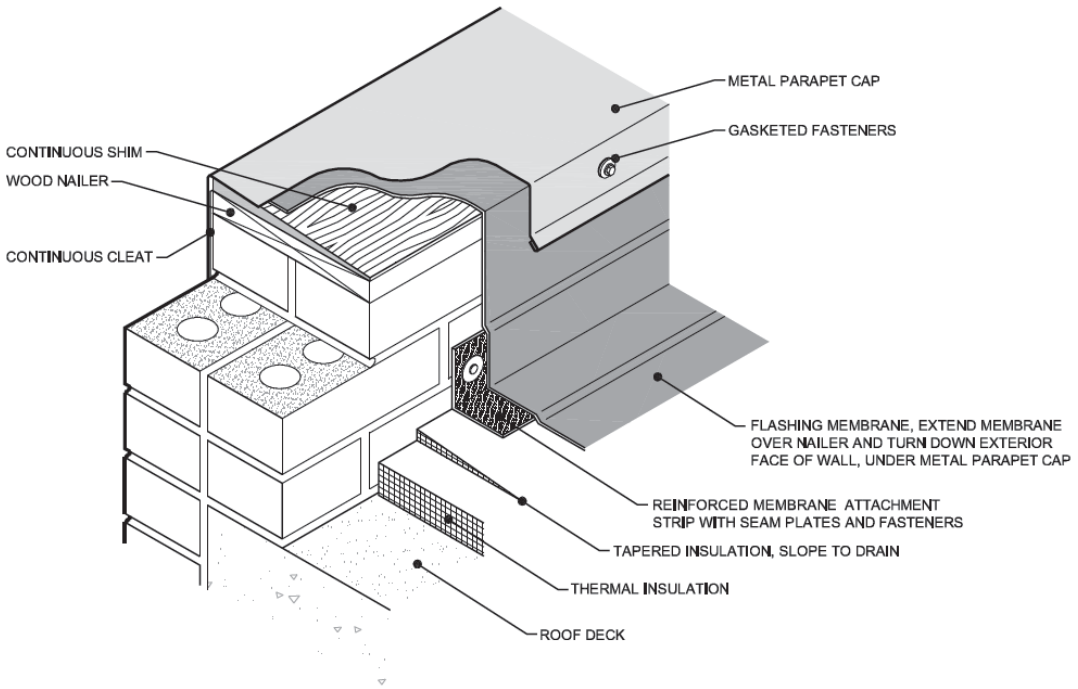

Recommendations

The roof edge of any building represents a critical detail for controlling water entry into the building. Building envelopes that utilize a parapet wall at the perimeter of the roof have their own set of considerations for proper design and construction. In some cases, the interior face of the parapet wall may be exposed or covered by the roof membrane. Extending the roof membrane up the vertical wall and under the coping cap provides added protection from water penetration not only at the vertical wall, but as a secondary barrier under the cap. The roof membrane should extend all of the way across the horizontal parapet and turn down the exterior face of the wall to provide the greatest weather protection. Coping caps should also be designed with a positive slope to shed water from the cap and protect seams and laps. If using a coping material that necessitates anchorage into the parapet wall, extra attention is needed where the anchors penetrate the flashing material.

Standard guide details for roofing applications can be found in the National Roofing Contractors Association's Roofing and Waterproofing Manual.

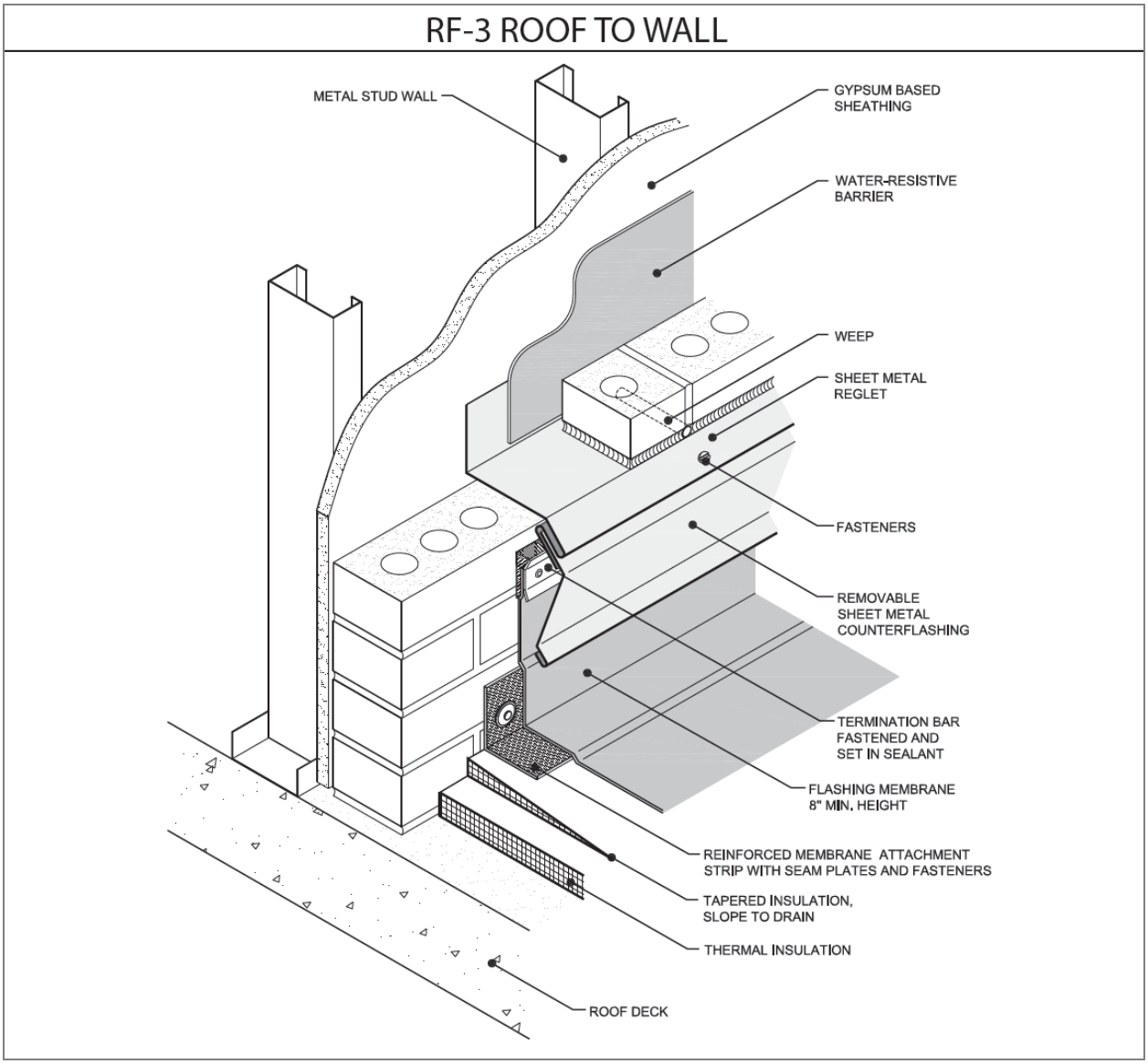

Recommendations

Proper integration of building envelope components at roof-to-wall intersections is critical to prevent water infiltration. The interface of roof and wall materials requires not only the appropriate design, but also coordination by the contractor to ensure proper sequencing of the trades. Water-proofing components in the wall above the roof need to properly lap over the roof materials below. Commonly, this includes continuous flashing installed along the base of the wall at the roof line which is integrated with the roof materials using counter flashing. Collection and discharge of water from the wall to the outside of the roof material is important to prevent water intrusion into the building at this location.

Standard guide details for roofing applications can be found in the National Roofing Contractors Association's Roofing and Waterproofing Manual.

RF-4 ROOF PENETRATION

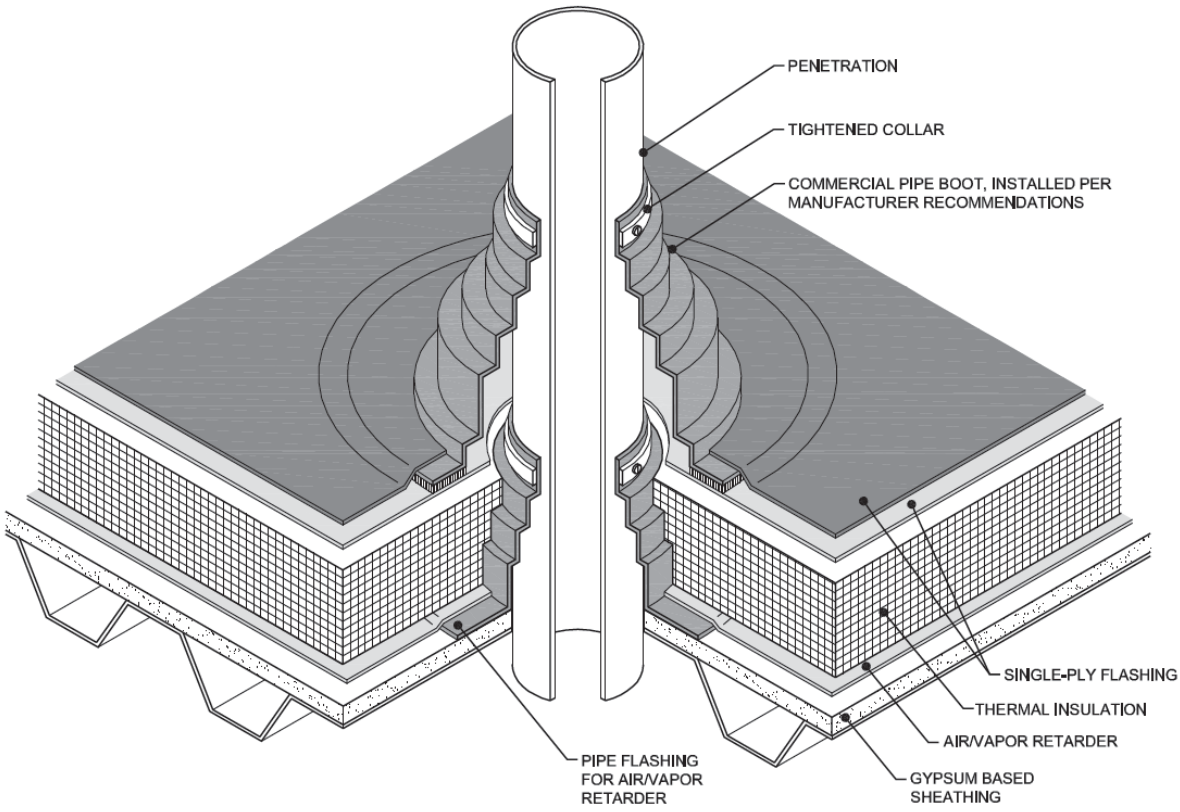

Recommendations

Penetrations through the building envelope breach not only the weather resistant layer of the assembly, but also through other systems such as air and vapor retarders. Therefore, they represent not only potential water leakage points, but also can be the source of other moisture problems due to air and vapor flow. Integration of the building envelope with all roof penetrations should include not only the roofing material, but also the air and/or vapor retarders. Unsealed penetrations are often identified as contributors to roof condensation due to the movement of moisture-laden air into the roof system. Integrating the air and /or vapor retarder with the penetrations can restrict air and vapor flow to help reduce moisture problems.

Standard guide details for roofing applications can be found in the National Roofing Contractors Association's Roofing and Waterproofing Manual.

Windows and Doors

Fundamentals

Windows and doors provide day light, ventilation, and protection against the elements. Many different types of windows and doors are available, including fixed, operable, and combination units. They can be fabricated using wood, fiberglass, vinyl, and metal. Window and doors are also available in various classes, including heavy commercial, architectural, and residential, and in several performance grades. Classes indicate structural capacities of the products. Performance grades indicate the wind-load design pressures at which the products have been successfully tested and are commonly expressed in pounds per square foot (psf). Design pressure requirements are determined according to location and building height.

During the design process, window selection should include an evaluation of required water and air infiltration resistance. Structural performance of both the individual and combined products should also be reviewed. Performance-based standards exist in order to rate and compare fabricated products and are based on a prescribed set of conditions. Designers must recognize that those test conditions may vary from as-built conditions and may necessitate alterations of the anticipated performance. The designer is responsible for determining the desired level of performance and designating the appropriate fenestration product in the project requirements.

Thermal properties should also be reviewed when selecting a fenestration product. Windows with insufficient thermal performance can lead to condensation formation and water infiltration. Many metal windows incorporate a thermal break in order to achieve various levels of thermal performance. A thermal break is an insulating material, commonly urethane or nylon-fiber, which prevents the transmission of heat through conductive materials, such as aluminum. It is important to evaluate surrounding materials and components because they can alter the effects of a thermal break and create a conductive path. Examples of parameters used to rate thermal performance include the U-factor and the Condensation Resistance Factor (CRF). Higher CRF and lower U-values indicate better thermal performance and are employed in areas of extreme cold.

Application/Design

As mentioned above, there are many types of window units available for selection and incorporation into a design concept. Fixed units typically yield higher values of air resistance, water resistance, and structural performance.

To ensure proper performance of the windows and doors, as well as the building envelope, installation practices and design details for fenestration products should be carefully considered. Despite windows and doors meeting certain test parameters for the air, water, thermal, and structural ratings, improper integration with adjacent materials and surrounding construction can alter and diminish the anticipated performance. For example, windows directly exposed to cold cavity air, as one might encounter behind a brick veneer wall, may exhibit lower surface temperatures, which can result in condensation formation. Additionally, windows and doors should be detailed with the understanding that leakage may occur. Effective strategies for preventing damage and water intrusion associated with windows is to recess windows from the

exterior plane of the cladding and to employ the proper flashing techniques at the head, sill and jambs.

Information regarding installation of windows can be found in E2112 - Standard Practice for Installation of Exterior Windows, Doors and Skylights published by the American Society for Testing and Materials as well as standards published by the American Architectural Manufacturers Association (AAMA).

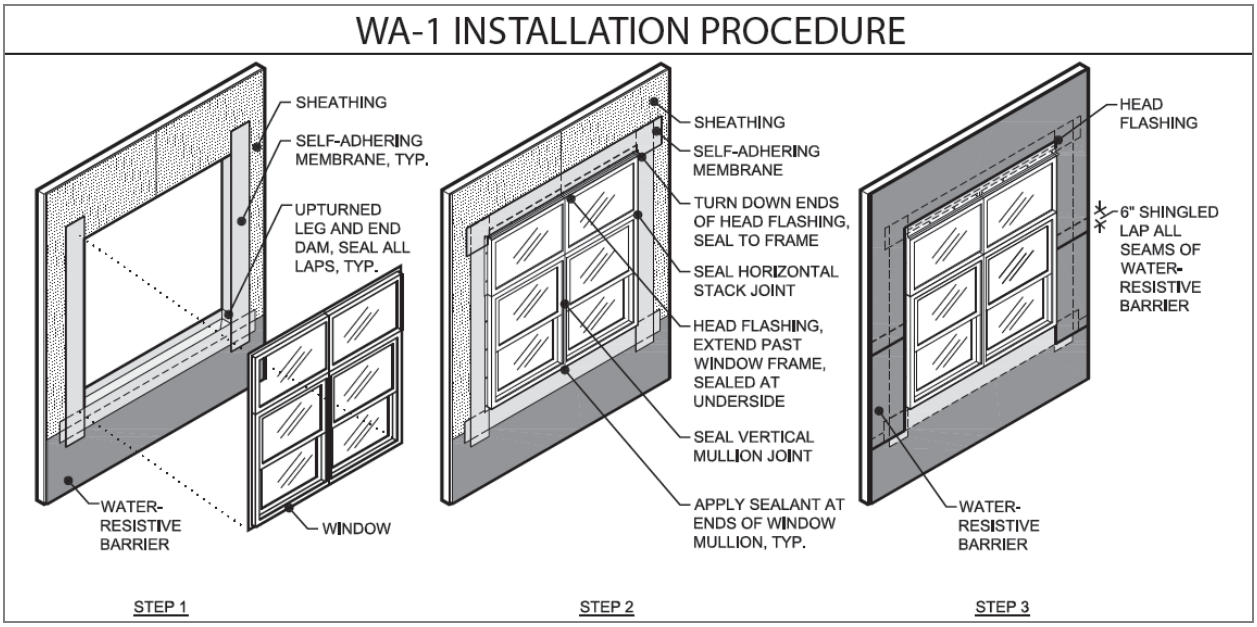

Recommendations

Proper integration of fenestration products with wall components is critical for successful performance of the building envelope. This requires consideration on how the fenestration product will interface with both flashing and the water-resistive component (whether concealed membrane or barrier cladding). In order to effectively integrate the two components, the designer must understand how the fenestration product performs to prevent water intrusion and how water management is accomplished by the cladding design.

Nail-flange windows must be integrated with the water-resistive barrier and flashing components in the rough opening similar to other window products. Integration of the components is commonly performed at the exterior of the substrate and the exterior face of the window flange. The integration can be performed to address both air and moisture control. To provide air control, the air barrier needs to be continuous at the perimeter of the window. However, for water resistance, proper shingling of the materials is important, and in some designs it is necessary to allow for moisture drainage below the window installation. Achieving proper air and moisture control requires proper design including consideration of constructability. The installation of a nail-flange window should occur in the following manner:

Step 1: Installation of the WRB below the window, as well as the sill flashing if applicable to the design. If used, the sill flashing must be installed to drain onto the WRB to prevent moisture from reaching the substrate.

Step 2: Integrate self-adhering membrane at jambs. The jamb flashing should lap into the sill flashing.

Step 3: Install the nail-flange window in accordance with the manufacturer's recommendations. For combination window units, it is important to ensure mullions are properly installed to prevent air and water leakage.

Step 4: Install head flashing with vertical leg that turns up the face of the sheathing and turned down ends over each window jamb. Self-adhering membrane can be installed to seal the flashing to the sheathing and integrate with the jambs.

Step 5: Complete WRB installation by installing material at the jambs to lap over the bottom piece, and lastly at the head to lap over the WRB installed at the jambs.

Information related to the installation of windows can be found in E2112 - Standard Practice for Installation of Exterior Windows, Doors and Skylights published by the American Society for Testing and Materials as well as standards published by the American Architectural Manufacturers Association (AAMA).

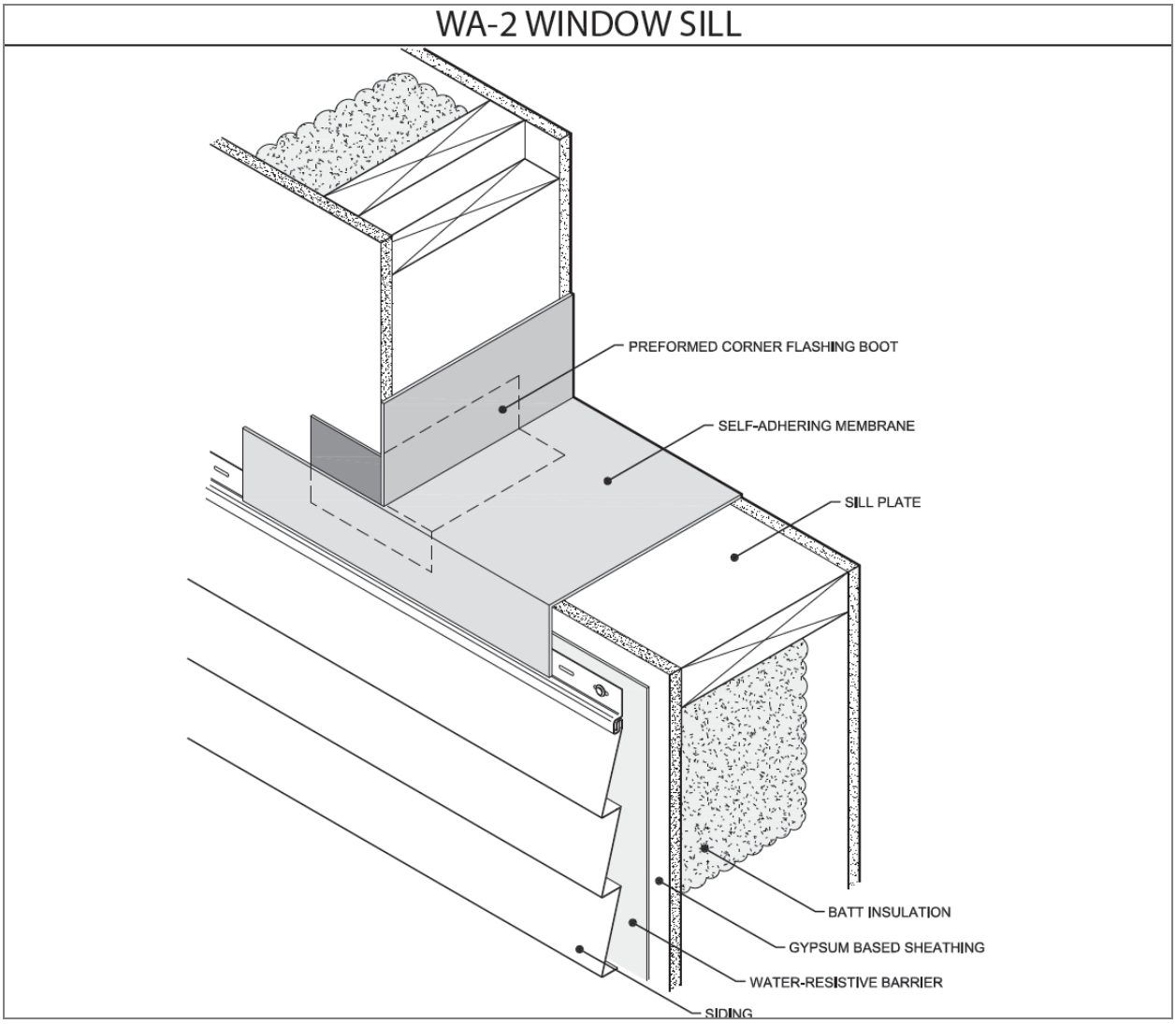

Recommendations

Detailing at the sill of windows is an important consideration in order to control water infiltration within the wall assembly, as well as to the interior. In the absence of proper detailing and construction, window openings are a common location for water intrusion. Waterproofing components must be properly shingled and integrated with the adjacent construction. The detail illustrates the use of self-adhering membrane as sill flashing. In this installation, care must be exercised at the terminations of the self-adhering membrane, such as at the jamb. Self-adhering membranes should continue up the vertical plane of the jambs in an end dam configuration, and include an upturned leg toward the interior. The use of a preformed corner flashing boot can ward against any voids and openings that may be created by the changes in plane of the self-adhering membrane at the jamb.

Information related to the installation of windows can be found in E2112 - Standard Practice for Installation of Exterior Windows, Doors and Skylights published by the American Society for Testing and Materials.

Interior Finishes

Fundamentals

As with the many other components of the building envelope, the designer is faced with many considerations when selecting interior finishes. Traditionally, the selection of interior finishes has been based on the suitability for the occupancy, specifically for durability and appearance, with little consideration for how they will affect the overall performance of the building envelope. For example, the structure may be left unfinished in industrial applications where appearance is less critical; however, in hospitals and hotels where durability, aesthetics, and maintenance are primary considerations, a combination of vinyl wallcoverings and interior gypsum products may be installed. In today's market, gypsum-based products are available that can provide both premium performance and superior aesthetics for a wide range of occupancies.

The interior finish and furnishings may directly impact the performance characteristics of the wall assembly. For example, paint coatings and wall coverings (such as vinyl wallpaper, mirrors, or built-in cabinetry) can affect the vapor and air permeability of the interior surface. While gypsum products are generally vapor permeable, when decorated with paint coatings or low permeability wall coverings, the vapor and air permeance of the interior can be greatly reduced. If not properly designed, the interior wall finishes can create a vapor retarder on the interior. This may not be appropriate in all buildings. The location of the air barrier and vapor retarder within the wall assembly is determined by several factors including, but not limited to, climate, location, occupancy, and constructability.

Application / Design

A successful building envelope should include a continuous air barrier for both moisture control and energy conservation. If not also acting as a vapor retarder, the location of the air barrier may be on the interior or exterior of the building structure. The installation of gypsum products as the interior finish can also serve as a continuous air barrier if the joints, seams, and penetrations are properly treated. Accordingly, exterior gypsum products can also be installed in such a manner as to create an air barrier, which is addressed more in more detail in the Walls section. Regardless of where the air barrier is located, it must be continuous and capable of withstanding imposed wind loads.

Constructability may also be considered when determining where the air barrier is to be installed. For example, liquid or sheet-applied products may be easier to apply in a continuous manner when installed over the exterior sheathing. Constructability, as well as climate and occupancy, will also determine whether the air barrier may also be utilized for vapor control. Many of the building codes and model energy codes still specify that the vapor barrier be installed in the "warm-in-winter" location and be rated at 1 perm or less. However, in some situations, the industry is beginning to recognize that materials with greater vapor permeability can provide good performance. Furthermore, some industry research and recommendations support the omission of a vapor retarder in some climate zones where drying occurs towards the interior in the summer and towards the exterior in the winter. In air-conditioned climates with hot-humid outdoor conditions, the vapor drive is to the interior where air conditioning provides dehumidification and lower vapor pressures. In these situations, interior wall coverings with low vapor permeance can impede the drying process and result in moisture problems. This condition

can occur with wall coverings and paint coatings if not properly selected by the designer. Therefore, it is important for the designer to understand the implications of climate, material selection, and the anticipated direction of drying (vapor drive).

It is also important for the designer to understand the HVAC systems to be used within the space and the interior design conditions. HVAC systems can control both the temperature and humidity of an enclosed space and also supplement the fresh air intake. Consideration should also be given to the heat loss or gain through the wall assembly and the resultant effect on the interior environment and building performance. HVAC systems can also be an important factor in the control of condensation formation. Today's construction techniques produce "tightly" built structures that effectively reduce the air exchange between the interior and exterior, reducing the amount of ventilation and dilution from air flow. HVAC systems can be designed and installed to provide appropriate fresh air intake and suitable exhaust which dilute indoor pollutants and moisture, resulting in a reduced potential for condensation formation.

The interior finishes at the fenestration units can also impact the potential for condensation. It is not uncommon for occupants to install blinds or curtains for aesthetic or privacy concerns; however, this practice may inadvertently prevent the warm, interior air from reaching the fenestration products. The warm, interior air can assist in maintaining surface temperatures above dew point, thereby reducing the potential for condensation formation at the frame or glazing.

Jobsite Supervision

Construction administration involves not only job site supervision, but coordination and communication among all involved parties. Project communication can occur through submittals, requests for information, and meetings. A preconstruction meeting can assist in clarifying responsibilities and project procedures. This type of meeting often includes the Owner, Architect, Contractor, subcontractors, and product manufacturers. This is an opportunity for all parties to discuss the scope of work and other project specific requirements prior to the start of work. Construction administration starts upon award of the contract. Contractors begin assembling the schedule for construction, a schedule of required submittals, and in many cases, assist in procuring permits. Specific job site supervision responsibilities can begin as early as the preconstruction conference and mobilization phase of the project.

It is advisable that the specifications, contract or the architect require a Water and Moisture Control Program from the Construction Manager (Construction Administrator) and/or General Contractor, and give that person the responsibility of managing water and moisture concerns throughout the construction project. Some of the elements of this program include bulk water management on the site through grading, protection and proper storage and handling of building materials, building protection from bulk water intrusion during construction, control of temperature and relative humidity after the building is enclosed and an action plan to address water incidents.

The specifications or contract should address the acceptable conditions of building materials before installation by defining an acceptable threshold condition for the material, for example, free of visible mold growth and moisture content within given range that does not allow for the development of mold.

Shop drawings and submittals should be submitted by the contractor and reviewed and approved prior to the start of construction. While shop drawings are not actual contract documents, they provide information regarding the installation procedures and fabrication of components. In fact, designers often use shop drawings as a means of requiring project specific detailing from the contractors, suppliers, and manufacturers. Therefore, development and review of such drawings is important to ensure that all building components interface properly, subsequently resulting in good performance. Submittals, much like shop drawings, are the responsibility of the contractor to submit to the architect, and serve to provide information regarding product data, samples, mockups or intended workmanship. Although review of such documents does not relieve the contractor of the obligation to meet the contract documents, it does provide an opportunity to prevent problems before materials are installed in the field. Therefore, it is in the best interest of the project to require submittals as early as possible, to allow time for review, correspondence, modification or re-submittal as needed.

Mockups and quality assurance testing are useful ways to verify that construction is in compliance with the construction documents. Testing can be conducted in a lab prior to construction or at the actual building as work progresses. Quality assurance provisions might involve diagnostic water testing of building components to verify that they meet the specifications or code requirements. Such testing may include window/door air and water resistance, air barrier performance, waterproofing performance, concrete strength, and many others. Performing such tests early in the project can prevent costly modifications at a later date.

Periodic testing may also be performed at later stages of the project to verify continued compliance.

The Contractor is contracted to complete the work in accordance with the contract documents, which also includes supervising the work of his subcontractors. However, during the construction phase, supervisors may encounter situations that are not directly addressed in the contract documents. At this time, the contractor should alert the architect of the discrepancy, error or omission. This form of contact is typically handled through a Request For Information (RFI). The architect will be expected to respond to such inquiries efficiently and in a manner consistent with the established project scope and design intent. Other examples of deviations or concerns that may arise on site are the presence of hazardous materials, such as chemical or biological. In this situation, the Contractor should notify the architect and owner of the situation in writing. The services of a licensed and qualified specialist may be required to develop a scope for remediation as required by the situation.

Job site storage of materials is another important consideration for any project. Porous building materials such as wood products, gypsum board, and insulation should be stored in a manner that prevents exposure to rain and excessive humidity. Materials should be held off of the ground and covered.

Site observation schedules should be determined prior to the start of construction, but remain flexible as field conditions dictate. It is important that site observations be documented in writing and effectively communicated to the project team. Observations can be conducted by architects, suppliers, general contractors, or various project representatives. Architects are not typically responsible for continuous on-site observation or monitoring of the constructions means, methods, techniques or sequencing; however, his observations at critical points during the construction process can help detect deviations from the contract documents and prevent further problems.

As the Work progresses, additional construction administration tasks may be necessary. Such tasks include contractor applications for payment, changes in work, and other certifications. Upon application for payment, the architect will verify the level of completion and provide certification. Changes in work during construction may arise for a number of reasons, and it is important to inform all project team members of proposed changes and approved changes. Small changes can often implicate multiple areas within the same project and alterations to scope and budget. Once the construction is determined to be substantially complete, a certificate for occupancy can be awarded. Construction administration responsibilities often conclude once a building is occupied; however, involvement in commissioning and operations may be included in the contract. Further details regarding these services can by found in the operation and maintenance section of this guide.

Operations Maintenance

A Moisture Control Plan should be part of a building's Operation and Maintenance Program. The Moisture Control Plan addresses four main areas: (1) the design and construction elements of the building incorporated to control bulk water, infiltration of water vapor, vapor diffusion, condensation, and high humidity; (2) the ongoing operations and maintenance practices designed to control moisture; (3) the procedures for investigation of potential moisture problems, and (4) the abatement of water intrusion problems and mold contamination.

Facility Design and Construction Materials

In a comprehensive Moisture Control Plan it is a good idea to outline the design elements incorporated in the building to manage moisture loading. This includes precipitation control features, such as the storm water runoff and drainage system, site grading features and roof overhangs and kick out diverters. Describe the design of the building envelope and construction materials including cladding, air space, weather resistant barrier, interior and exterior sheathing, insulation and vapor barrier. Include the methods used for attic ventilation, plumbing insulation to control condensation, and the location of sump pumps. Also note HVAC-related moisture management practices including sealing supply and return ducts to minimize duct leakage and pressure imbalances, the use of humidity sensors, temperature and humidity control systems and heating and cooling duct insulation to prevent condensation, and exhausts for moisture generating activities, kitchens and bathrooms.

Routine Operations and Maintenance

The primary objective of operations and maintenance is to routinely inspect for and control the moisture conditions that allow or encourage microbial growth. Daily building walkthroughs are valuable in identifying evidence of moisture intrusion or high humidity conditions that - if found - can be investigated promptly. Inspections should be performed by those trained to recognize visible mold and conditions that could indicate the presence of concealed mold, like musty odors, dampness and peeling paint and wall coverings. These walk-throughs of both interior and exterior spaces can prevent long-term damage from occurring if windows, doors and plumbing pipes are checked for leaks and condensation, bathrooms, kitchens and wet areas are checked for moisture and to ensure that caulking and grout are intact and window coverings are opened daily to minimize condensation around windows and window sills.

Quarterly inspections that include attic and below grade spaces should be conducted for moisture related issues as well. Ensure that attic ventilation is not restricted, as that condition creates high humidity and a hot atmosphere in the attic.

In general, the following actions should be taken as part of an O&M Program to control moisture: exhaust air directly to the outside in high moisture areas; prevent condensation on cold surfaces (i.e. windows, piping, exterior walls, roof or floors) with proper insulation, raising the temperature and increasing circulation; maintain relative humidity below 60%, preferably below 50%, by using air conditioning and proper ventilation; keep areas where there is a potential moisture problem free of carpeting; and check the installation and operation of moisture barriers, weep holes, HVAC systems, roof, windows, and vents. Any building envelope leaks and

plumbing leaks should be promptly repaired and sweating pipes and traps properly insulated. Replace wet and or stained ceiling tiles.

Exterior sources of moisture can be controlled by routinely inspecting the roof and flashing, maintaining the integrity of the roof and keeping the gutter/downspout systems clean. Inspecting after a rain event provides the opportunity to identify puddling and standing water that could pose problems around the foundation. To prevent water intrusion from rain and ground water, vegetation and mulch should be kept away from the foundation; the site should also be graded to facilitate water runoff away from the building. Special attention should be paid to landscape irrigation and watering near or on the building to ensure that water runs away from the building.

Procedures for Investigation and Repair of Moisture Problems

When a moisture problem arises, responders should conduct the initial evaluation and start the documentation process, isolate the area, determine the cause of the problem and establish the proper steps to resolve the issue. It is important to identify the source, cause, and extent of the moisture problem to determine the appropriate action to be taken to correct and repair it. All potential sources and causes such as plumbing leaks, roof, door and window leaks, groundwater infiltration, flooding, excessive humidity and condensation should be evaluated.

In the case of accidental water intrusion from flooding, rain, snow melt, or plumbing and sewage backups, the water intrusion must be stopped as soon as possible to prevent damage. Equipment and furniture should be dried and protected and water removed from the area. The area should be dehumidified and damaged materials replaced as soon as possible. Building staff should respond immediately, and professional contractors should be hired as necessary to perform the clean-up and restoration.

Porous materials that cannot be dried within 24 to 48 hours usually cannot be saved without sophisticated cleaning and considerable expense. Water damaged porous materials, such as gypsum board, fibrous glass or cellulose insulation, carpets, mattresses, upholstered furniture, papers, and books should be removed and disposed of in sealed bags.

In cases presenting sewage backup and flooding, occupants should be removed from the affected area. Porous materials damaged by water that may contain sewage (“gray water” or “black water”) should be removed and replaced. To limit the spread of bacteria and mold, items will require rapid decontamination by water extraction, cleaning, disinfecting and drying of all wet surfaces. Hard surfaces contaminated by black or gray water can be cleaned with disinfectants. If large areas are water-damaged, desiccants and/or dehumidifiers may be used as necessary to remove excess humidity and prevent mold growth.

Mold Remediation

The extent of microbial contamination must be visually assessed. In cases where concealed microbial growth is likely, or airborne microbial contamination requires assessment, a qualified specialist should be retained. Contaminated areas should be secured and untrained and unauthorized individuals restricted from entry into the area. If significant microbial

contamination has occurred, a qualified mold remediation contractor should be retained to remediate the area.

Microbial contamination on surfaces or in water reservoirs should be removed by qualified personnel according to current recognized guidelines and standards to avoid dissemination and occupant exposures. When contaminated materials are removed, they should be handled in a manner that avoids dispersion of microbial contamination and bagged prior to removal from contamination site to prevent contamination of adjacent areas. Appropriate steps should be taken to prevent future microbial growth in these locations without causing occupant exposure to potentially harmful chemicals.

In situations where significant contamination has occurred, post-remediation sampling should be performed by a qualified specialist to ensure that no visible mold remains and that surface microbial samples in remediated areas indicate a reduction in microbial levels to normal surface fungal and bacterial ecology as compared with surfaces of clean reference materials.

Staff Training

In commercial buildings, engineering, facilities and housekeeping personnel should receive initial and periodic training in order to recognize and control moisture and the potential problems associated with elevated moisture in a building. These personnel should be trained to visually investigate all reports relating to water leaks, water penetrations, excessive condensation, and mold. All water-related and mold incidents should be assessed, monitored, documented, and brought to closure as soon as possible. These steps will assist in providing a healthy environment for building occupants.

Additional information related to mold and the effects of moisture in buildings can be found in the following resources:

- World Health Organization, Guidelines for Indoor Air Quality: Dampness and Mold, 2009

- Guidelines on Assessment and Remediation of Fungi in Indoor Environments, New York City Department of Health and Mental Hygiene, November 2008

- U.S. environmental Protection Agency, Mold Resources, http://www.epa.gov/mold/moldresource.html.